MORGAN & CLAYPOOL PUBLISHERS

Vehicle Suspension System Technology and Design

Avesta Goodarzi
Amir Khajepour

Synthesis Lectures on Advances in Automotive Technology

Series Editor: Amir Khajepour, *University of Waterloo*

Vehicle Suspension System Technology and Design

Synthesis Lectures on Advances in Automotive Technology

Editor

Amir Khajepour, *University of Waterloo*

The automotive industry has entered a transformational period that will see an unprecedented evolution in the technological capabilities of vehicles. Significant advances in new manufacturing techniques, low-cost sensors, high processing power, and ubiquitous real-time access to information mean that vehicles are rapidly changing and growing in complexity. These new technologies—including the inevitable evolution toward autonomous vehicles—will ultimately deliver substantial benefits to drivers, passengers, and the environment. Synthesis Lectures on Advances in Automotive Technology Series is intended to introduce such new transformational technologies in the automotive industry to its readers.

Electrification of Heavy-Duty Construction Vehicles
Hong Wang, Yanjun Huang, Amir Khajepour, and Chuan Hu
2017

Vehicle Suspension System Technology and Design
Avesta Goodarzi and Amir Khajepour
2017

Vehicle Suspension System Technology and Design
Amir Khajepour and Avesta Goodarzi
www.morganclaypool.com

ISBN: 9781627059107 print
ISBN: 9781627056335 ebook

DOI 10.2200/S00767ED1V01Y201704MEC001

A Publication in the Morgan & Claypool Publishers series
SYNTHESIS LECTURES ON ADVANCES IN AUTOMOTIVE TECHNOLOGY

Vehicle Suspension System Technology and Design

Avesta Goodarzi and Amir Khajepour
University of Waterloo

SYNTHESIS LECTURES ON ADVANCES IN AUTOMOTIVE TECHNOLOGY

MORGAN & CLAYPOOL PUBLISHERS

ABSTRACT

The purpose of this book is to cover essential aspects of vehicle suspension systems and provide an easy approach for their analysis and design. It is intended specifically for undergraduate students and anyone with an interest in design and analysis of suspension systems. In order to simplify the understanding of more difficult concepts, the book uses a step-by-step approach along with pictures, graphs and examples.

The book begins with the introduction of the role of suspensions in cars and a description of their main components. The types of suspensions are discussed and their differences reviewed. The mechanisms or geometries of different suspension systems are introduced and the tools for their analysis are discussed. In addition, vehicle vibration is reviewed in detail and models are developed to study vehicle ride comfort.

KEYWORDS

suspension systems, suspension design, suspension analysis, active and adaptive suspensions, ride comfort

Contents

Preface

This book encompasses all essential aspects of suspension systems and provides an easy approach to their understanding and designing. The book is intended specifically for undergraduate students and is accessible to anyone with an interest in learning about the foundations and design of suspension systems. This book uses a step-by-step approach using pictures, graphs, tables, and examples so that the reader may easily grasp difficult concepts.

After a short introduction, suspension systems and their components are discussed and reviewed. The following sections define and examine suspension mechanisms and their geometrical features. Vehicle ride models are derived to study and discuss vehicle ride comfort. The book ends with analysis on suspension design factors and component sizing.

Acknowledgments

This book would not have been possible without the help of many people. We are particularly grateful to M. Naghibian, M. Ghare, C. Jarvis, S.M. Fard, and A. Pazooki for their assistance in preparing the content of the book, and Ananya Chattoraj for editing and proofreading the book. We are also thankful to Morgan & Claypool Publishers for providing the opportunity for this book and their consistent encouragement and support throughout this project.

Introduction

When people consider purchasing a new vehicle, they normally think of horsepower, torque, 0–100 km/h acceleration, and fuel economy. However, they are likely unaware about an important factor; the engine's power or vehicle speed are utterly useless if the driver cannot control the vehicle. Certainly, many people may recognize the importance of the suspension for ride comfort, but they are less aware about the complete range of vehicle suspension duties. In fact, in addition to ride comfort, the suspension system plays an important role in vehicle performance, stability, and safety. Accordingly, automotive engineers turn their attention to the suspension system, an area usually ignored by customers considering a purchase.

Historic horse-drawn carts had an early form of a suspension system, where the platform swung on iron chains attached to a wheeled frame on the carriage (Figure I.1). This system was the basis for all suspension systems until the end of the 19th century. Obadiah Elliot is known as the first person that used a spring in the suspension system of a vehicle, and Mors of Paris first fitted a suspension system with shock absorbers in 1901. Today, there are many kinds of suspension systems with complex structures and elements, some of which will be discussed here.

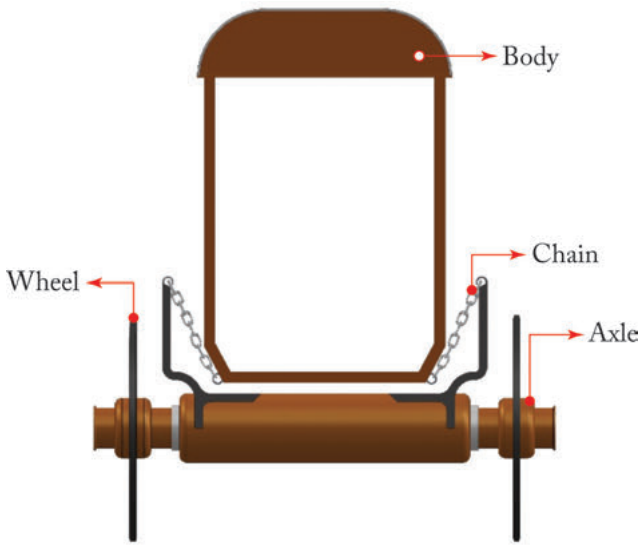

Figure I-1: Early form of suspension systems for horse-drawn carts.

This book begins with the definition of the suspension system and its function. It then goes on to describe the main components and desired features of suspension systems. This is followed by a classification of the different types of suspensions along with their advantages and disadvantages. Major suspension elements like springs, shock absorbers, and the anti-roll-bar are introduced. There will also be a section that presents advanced, active, and semi active suspension systems. Finally, the design and analysis of a suspension mechanism along with its major parts are explained.

CHAPTER 1

Suspensions, Functions, and Main Components

1.1 SUSPENSION SYSTEMS

To many focusing on ride comfort, it may seem like the suspension system is merely a set of springs and shock absorbers which connect the wheels to the vehicle body. However, this is a very simplistic viewpoint of the suspension system. A vehicle suspension system provides a smooth ride over rough roads while ensuring that the wheels remain in contact with the ground and vehicle roll is minimized. The suspension system contains three major parts: a structure that supports the vehicle's weight and determines suspension geometry, a spring that converts kinematic energy to potential energy or vice versa, and a shock absorber that is a mechanical device designed to dissipate kinetic energy.

An automotive suspension connects a vehicle's wheels to its body while supporting the vehicle's weight. It allows for the relative motion between wheel and vehicle body; theoretically, a suspension system should reduce a wheel's degree of freedom (DOF) from 6 to 2 on the rear axle and to 3 on the front axle even though the suspension system must support propulsion, steering, brakes, and their associated forces. The relative motions of the wheels are its vertical movement, rotational movement about the lateral axes, and rotational movement about the vertical axes due to steer angle.

1.2 FUNCTIONS OF SUSPENSION SYSTEMS

As previously mentioned, it is mostly assumed that the only function of a suspension system is the absorption of road roughness; however, the suspension of a vehicle needs to satisfy a number of requirements with partially conflicting aims as a result of different operating conditions. The suspension connects the vehicle's body to the ground, so all forces and moments between the two go through the suspension system. Thus, the suspension system directly influences a vehicle's dynamic behavior. Automotive engineers usually study the functions of a suspension system through three important principle.

- **Ride Comfort:** Ride comfort is defined based on how a passenger feels within a moving vehicle. The most common duty of the suspension system is road isolation—isolating a vehicle body from road disturbances. Generally, ride quality can be quantified by the passenger compartment's level of vibration. There are a lot of inner and outer

vibration sources in a vehicle. Inner vibration sources include the vehicle's engine and transmission, whereas road surface irregularities and aerodynamic forces are the outer vibration sources. The spectrum of vibration may be divided up according to ranges in frequency and classified as comfortable (0–25 Hz) or noisy and harsh (25–20,000 Hz).

- **Road Holding:** The forces on the contact point between a wheel and the road act on the vehicle body through the suspension system. The amount and direction of the forces determine the vehicle's behavior and performances, therefore one of the important tasks of the suspension system is road holding. The lateral and longitudinal forces generated by a tire depend directly on the normal tire force, which supports cornering, traction, and braking abilities. These terms are improved if the variation in the normal tire load is minimized. The other function of the suspension is supporting the vehicle's static weight. This task is performed well if the rattle space requirements in the vehicle are kept minimal.

- **Handling:** A good suspension system should ensure that the vehicle will be stable in every maneuver. However, perfect handling is more than stability. The vehicle should respond to the driver's inputs proportionally while smoothly following his/her steering/braking/accelerating commands. The vehicle behavior must be predictable, and behavioral information should accordingly be communicated to the driver. Suspension systems can affect vehicle handling in many ways: they can minimize the vehicle's roll and pitch motion, control the wheels' angles, and decrease the lateral load transfer during cornering.

1.3 MAIN COMPONENTS OF SUSPENSION SYSTEMS

A vehicle suspension system is made of four main components—mechanism, spring, shock absorber, and bushings—as shown in Figure 1.1.

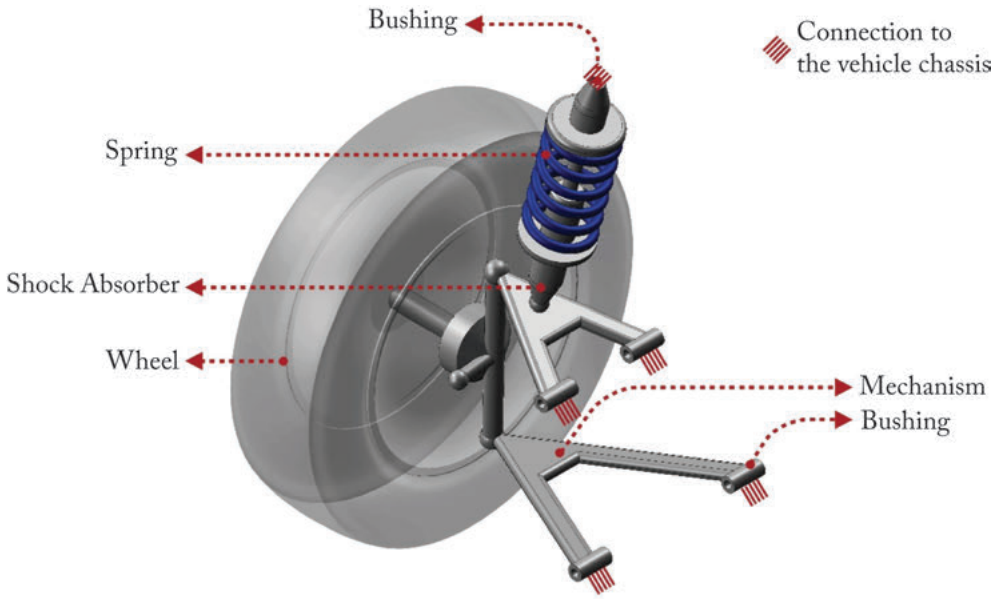

Figure 1.1: The main components of a suspension system.

- **Mechanism:** The suspension mechanism might contain one or several arms that connect a wheel to the vehicle body. They transfer all forces and moments in different directions between the vehicle body and the ground. The mechanism determines some of the most important characteristics of a suspension system. It determines the suspension geometry and wheel angles and their relative motions. Variation in wheel angles during suspension travel causes a change in tire forces, which affect the vehicle's road holding and handling. The main weight of a suspension system arises from its mechanism. Using heavy materials in its construction decreases the ride quality, whereas light materials, although improve ride quality, are more expensive.

- **Spring:** The spring is usually a winding wire or a number of strips of metal that have elastic properties. It supports the vehicle's weight and makes a suspension tolerable for passengers. To best understand suspension behavior, the most important component requiring study is the spring. However, with its importance, a conflict arises: when using high stiffness springs, the vehicle exhibits good road holding and handling but with a noticeably decreased ride comfort. This creates a condition of limitation when choosing an appropriate spring stiffness. The spring weight and size may also make this accommodation difficult.

- **Shock absorber:** The shock absorber is a mechanical or hydraulic device to dampen impulses. A high damping shock absorber compromises the vehicle's ride quality in order to immediately dampen impulses to improve handling and road holding.

- **Bushings:** The bushings prevent the direct contact of two metal objects in order to isolate noise and minimize vibration. Soft materials such as rubber is used in bushings for isolation. In fact, they are a type of vibration isolator used to connect various moving components to the vehicle body or suspension frame. Many types of bushing exist, and they are classified by the number of DOF between the two connected parts that they support. Revolute joints are the most common type of bushings. They are annular cylindrical and support a rotational relative motion, whereas ball joints allow rotational relative motion in all directions. Bushings are some of the most expensive parts in a suspension system.

1.4 DESIRED FEATURES OF SUSPENSION SYSTEMS

A suspension system should satisfy certain requirements for use in vehicles. The main desired features are as follows.

- **Independency:** It is desirable to have the movement of a wheel on one side of the axle to be independent from the movement of the wheel on the other side of the axle. Figure 1.2 (top) shows a vehicle with its left wheel going over a bump. At higher speeds, the wheel can negotiate the bump without disturbing the other wheel. This is only possible when each wheel has an independent suspension. Independency of wheel movement improves a vehicle's ride comfort, road holding, and handling.

- **Good camber control:** The camber angle is the wheel angle about its longitudinal axis (this will be comprehensively discussed in Section 4.1.2). A negative camber is desired since it results in improved handling, however, the convex shape of roads tends toward a positive camber to reduce tire wear. Due to road bump and body roll, the camber will ultimately change. Using a well-designed suspension geometry, we can control the camber angle (Figures 1.3 and 1.4).

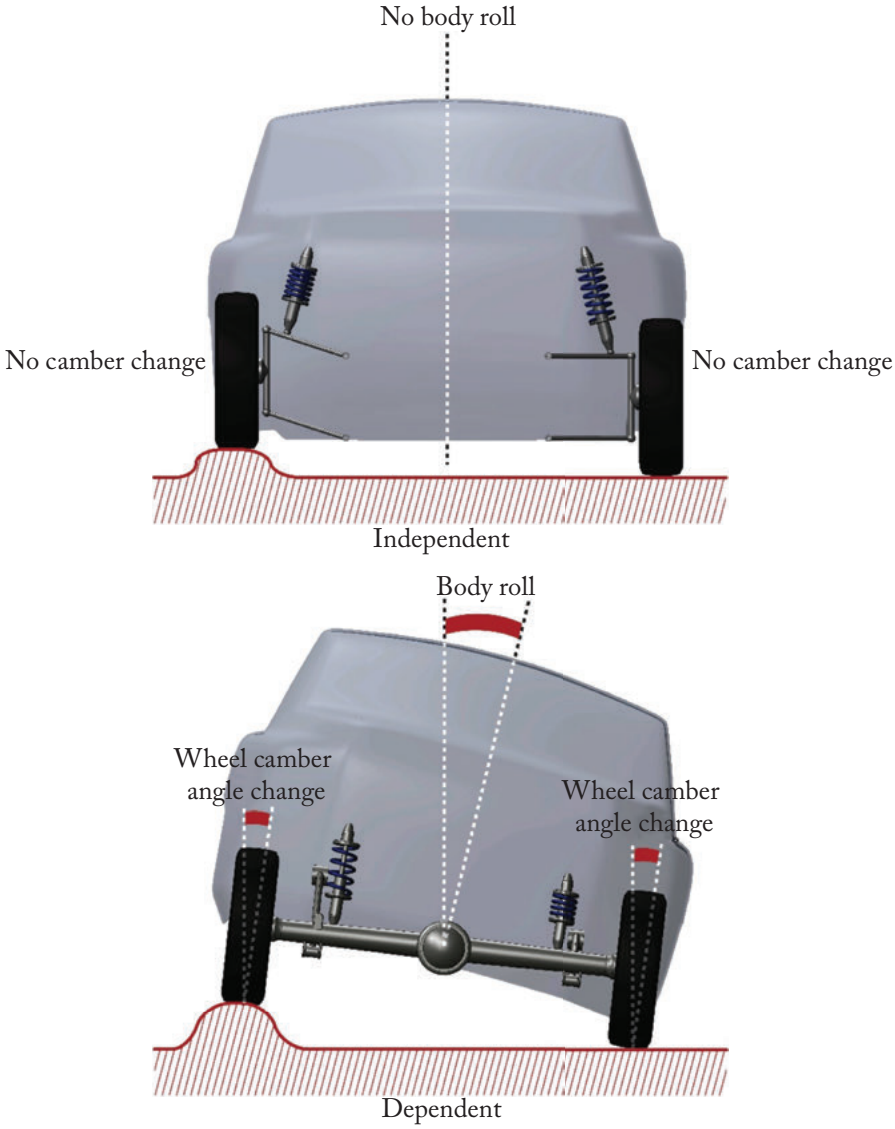

Figure 1.2: Independent vs. dependent suspension systems.

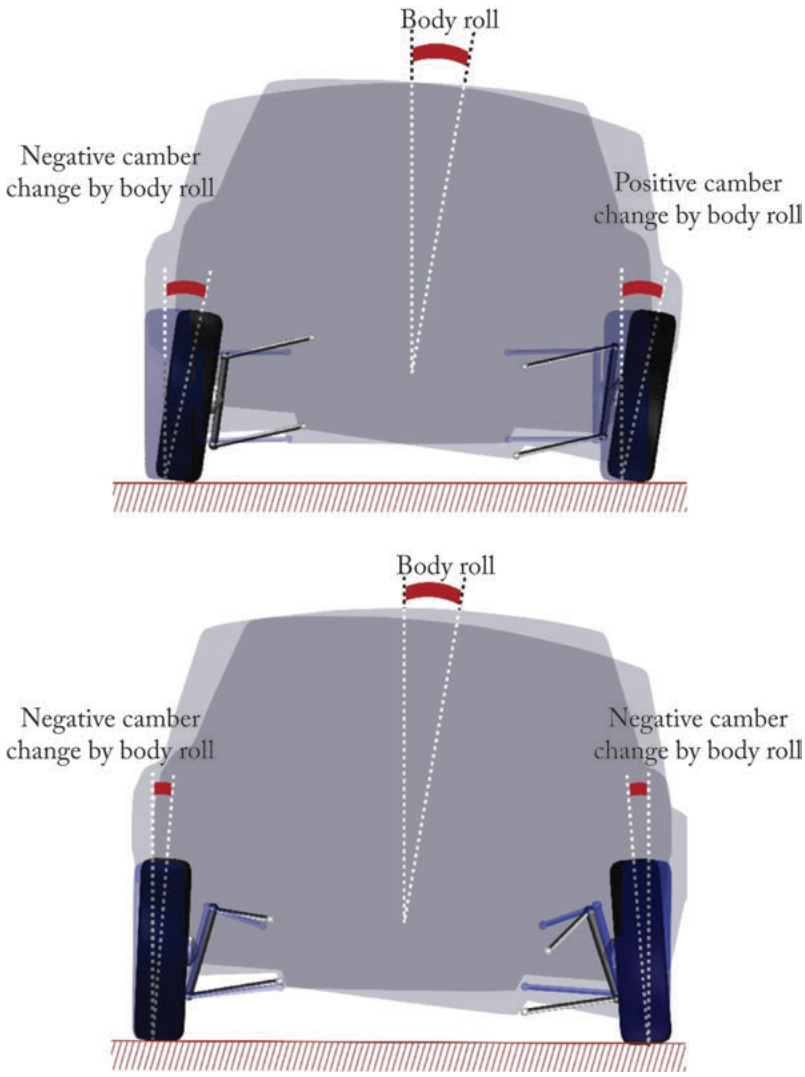

Figure 1.3: Effects of suspension design on camber change due to body roll.

- **Good body roll control:** Each suspension system has a roll center. The hypostatical line that connects the front and rear suspensions' roll centers is called the roll axis. The vehicle's body rolls about this line during cornering maneuvers. It is necessary to analyze the roll axis because of its effect on the body roll and lateral vehicle behavior. The design of the suspension geometry should account for the best location of the roll axis in order to optimize vehicle body roll motion.

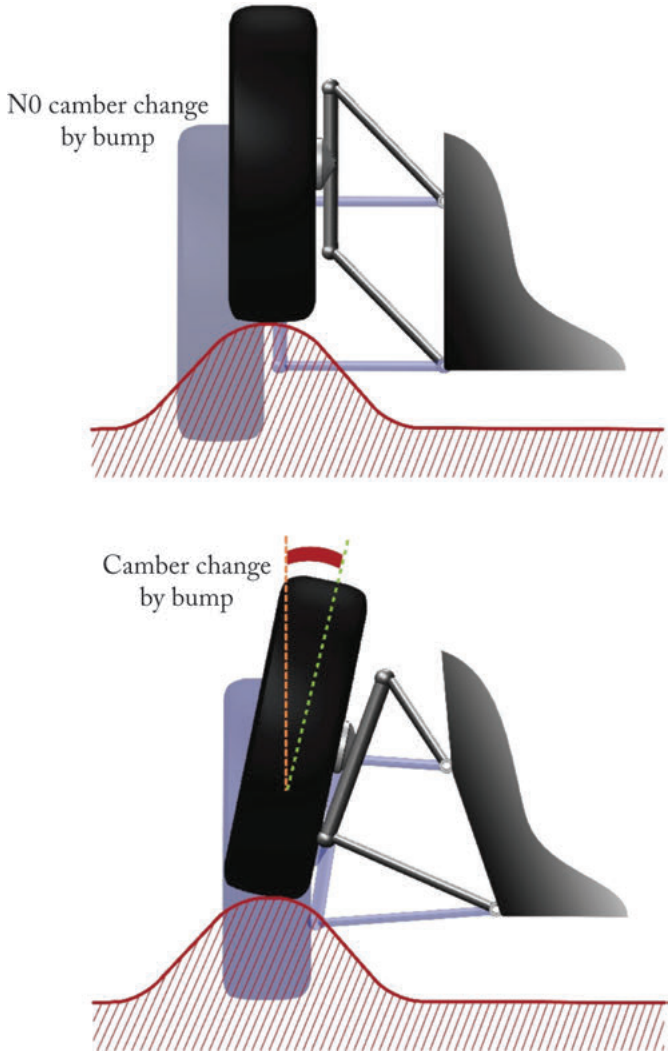

Figure 1.4: Effects of suspension design on camber change due to road bump.

- **Good space efficiency:** It comes as no surprise that the space utilized by a suspension system may create difficulties for the installation of other components of the vehicle. Under the hood, the suspension system should leave enough room for an engine and other components. Also, the suspension of the rear axle should not interfere with the vehicle trunk and, instead, occupy only its internal space (Figure 1.5).
- **Good structural efficiency:** The suspension system should be able to handle the vehicle's weight and all applied forces and moments in the contact area between the

wheel and the road. The suspension mechanism must feed loads into the body in a well distributed manner and prevent the transfer of concentrated forces onto the vehicle's body (Figure 1.6).

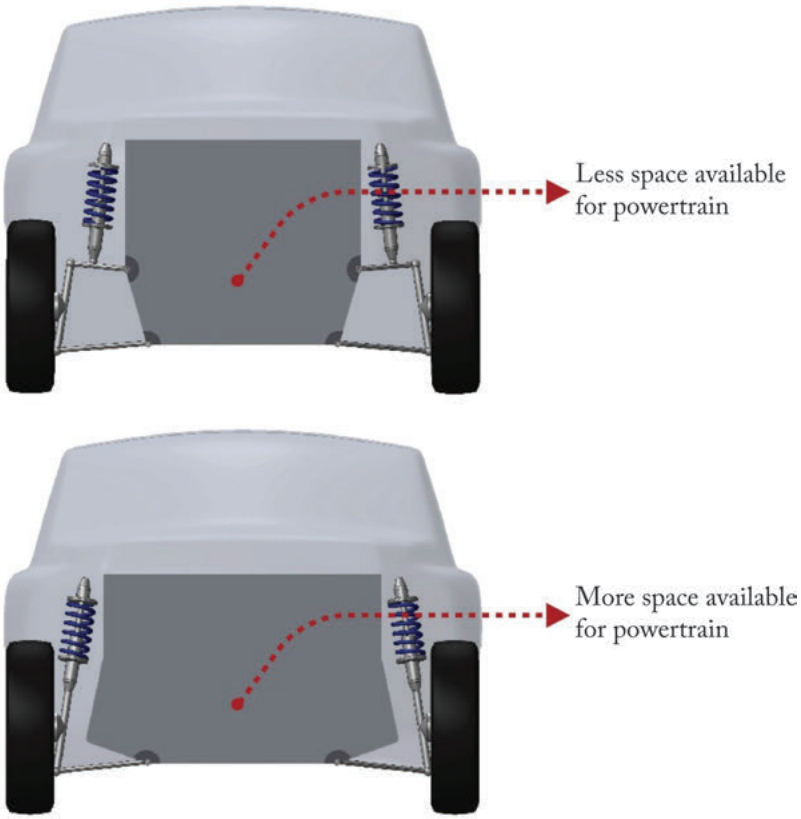

Figure 1.5: Space efficiency of suspension systems.

- **Good isolation:** Improving ride quality and isolating road roughness is one of the most important tasks of a suspension system.
- **Low weight:** Due to the road irregularities, the kinematic energy of a suspension system is proportional to its mass. Higher kinematic energy results in stronger transmitted shocks to the vehicle body. This effect clearly decreases the ride quality. To minimize this negative effect, we should minimize the suspension mass by using optimized designs and/or lightweight material. Lightweight materials may increase the cost and, therefore, a balanced design is needed for any suspension system.

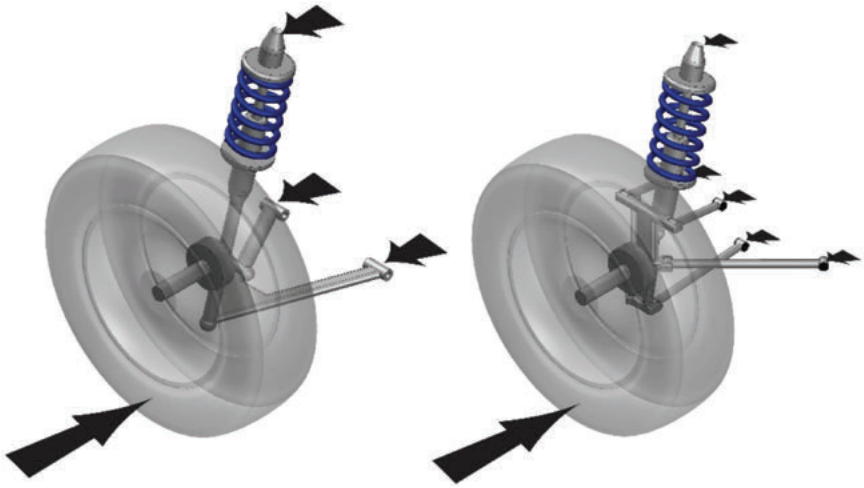

Figure 1.6: Structural efficiency in suspension systems

- **Long life:** No one enjoys having to repair their car frequently, so the suspension must be as durable as any other part of a car. A durable system is able to resist wear, pressure, or damage, all of which play important roles in the success of a product.
- **Low cost:** While defining a low enough cost is a subjective matter, the suspension as a vehicle sub-system should be affordable. High performance suspension systems are more expensive, and mainly used in premium vehicles. Using a high number of bushings and lightweight materials certainly improves the ride quality, noise isolation, and performance of the system, but they also increase the cost of the product.
- **Others:** Other suspension features may include anti-dives and anti-squats. When a vehicle is breaking, a dive occurs where the front of the vehicle dips and the tail rises. A similar but opposite action, a squat, happens during acceleration. This rotational movement is slight but since the human body is very sensitive to pitch motion, mitigating for this movement in the passenger cabin allows for greater ride quality.

CHAPTER 2

Classification of Suspension Systems

2.1 DIFFERENT SUSPENSION TYPES

2.1.1 SOLID AXLE

A solid axle is known to be the first suspension type used in vehicles where the wheels are mounted at either ends of a rigid beam (Figure 2.1). A solid axle system generally uses leaf springs, however, there are some equipped with coil springs. A solid axle suspension system is not classified as an independent type of suspension, so any movement of one wheel is transmitted to the other wheel. Solid axles have some advantages in their load carrying capacity; solid axles are also affordable and durable. However, they have many disadvantages when considering passenger cars. Leaf springs result in unwanted transmitted noise and vibration. Rigid beams considerably reduce ride quality, and their size and dimensions demand enough space above the axle to accommodate the springs. Solid axle suspensions are commonly used in commercial vehicles where a high load carrying capacity is required. Table 2.1 presents a summary of details regarding the solid axle.

Table 2.1: Advantages and disadvantages of a solid axle suspension

Features	Description	Verdict
Independency	Mutual wheel influence	Bad
Camber angle	Fixed wheels to the axle	Bad
Roll angle	High roll center height	Moderate
Space efficiency	Need more space	Bad
Structural efficiency	Concentrated forces at mounting points	Bad
Isolation	Noisy due to leaf springs motion against each other	Bad
Weight	Heavy axle	Bad
Lifespan	Less moving components and maintenance	Good
Cost	Less components and no complex parts	Good

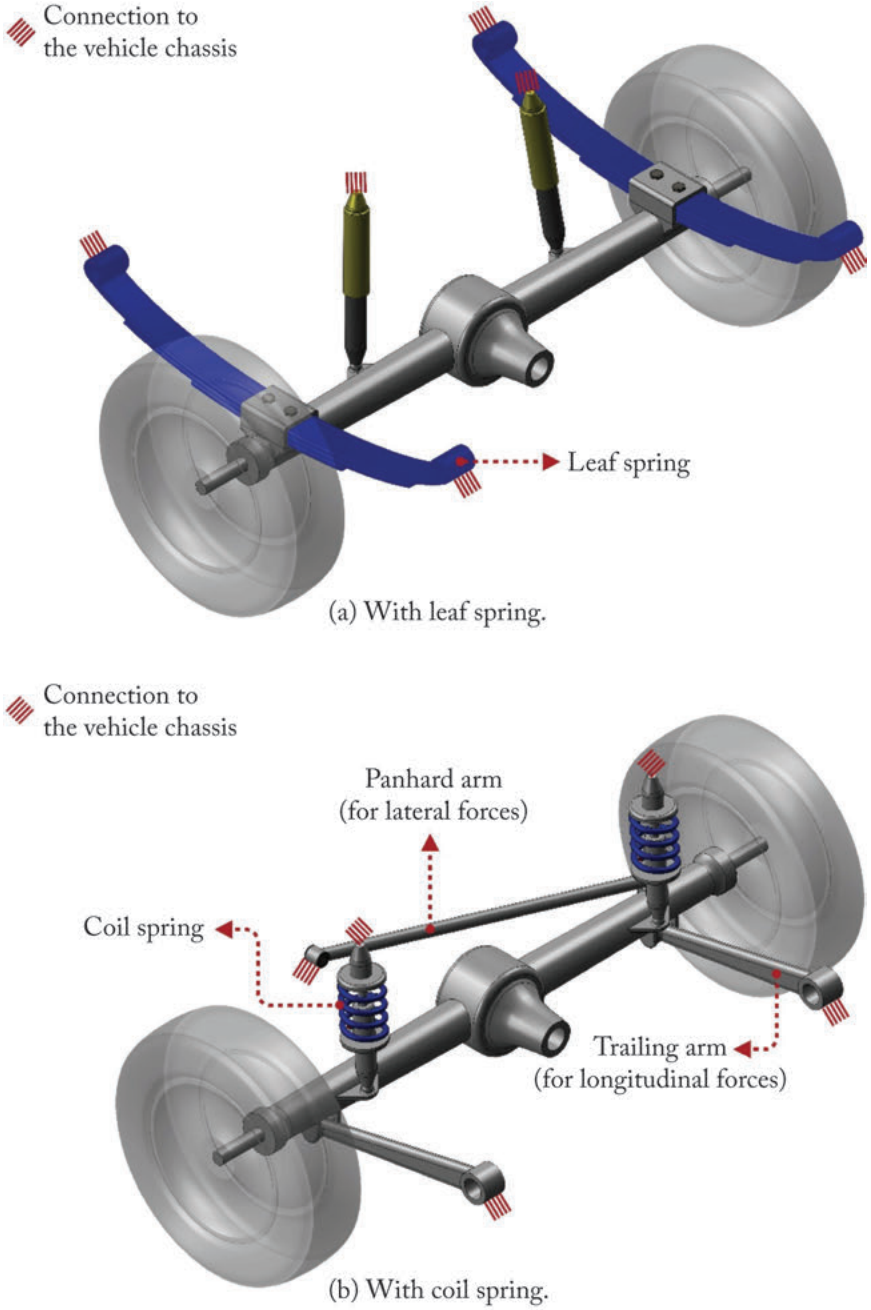

Figure 2.1: Different types of solid axle suspension.